Name	Arkitekt Urinal
Collection	Arkitekt
Height	300
Width	405
Depth	695
Colour	White
Designer	VitrA Design Team
Finish	Hygiene
Brand	VitrA

Product Code: 4319B003-0210

Description

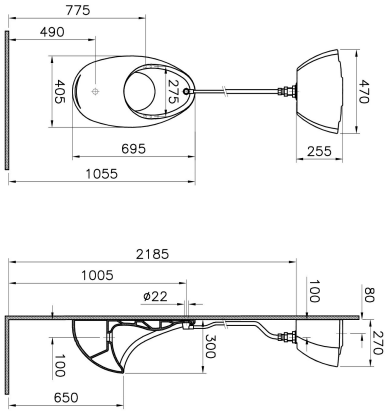

VitrA reserves the right to make changes in products and technical details without prior notice.
All drawings contain the necessary measurements which are subject to standard tolerances. For exact measurements, in particular for customized installation scenarios, it can only be taken from the finished ceramic product.